07 72 53
1657 South 580 East
American Fork, UT 84003

D4H DECK MOUNT

DESCRIPTION

- Designed for use with most stick framed roof types
- Accepts 1” (1.315” OD) fence tube
- Installed using (4) 3/8” lag bolts or (4) 1/4" SDS screws
- Must be installed into structural roof member such as a truss or rafter beam
- All roof penetrations that go through the underlayment are required to be flashed or sealed
- Ice Flags recommended
- Powder coated to match roofing material color
- Overall dimensions: 12”L X 2.16”W X 13.51”H

MATERIALS

- Steel: 1/4” (ASTM A36)
- Copper: 1/4” (ASTM B152)
- Weathering Steel (known as CORTEN®): 1/4” (ASTM A588)

COLORS/FINISHES

- Raw steel
- Electro-galvanized steel
- Hot-dipped galvanized steel
- Mill finish Copper
- Mill finish A588
- Powder coating available in many colors visit http://trasnowandsun.com/color-chart/ to see color chart

NOTE: Due to specific job conditions, TRA Snow and Sun will only warranty a snow retention system/layout that has been designed by TRA Snow and Sun.

USED ON: ASPHALT SHINGLES, CEDAR SHINGLES, FLAT SEAM METAL, GRANULE METAL, METAL PANEL, SLATE, SIMULATE SLATE, & WOOD SHAKES

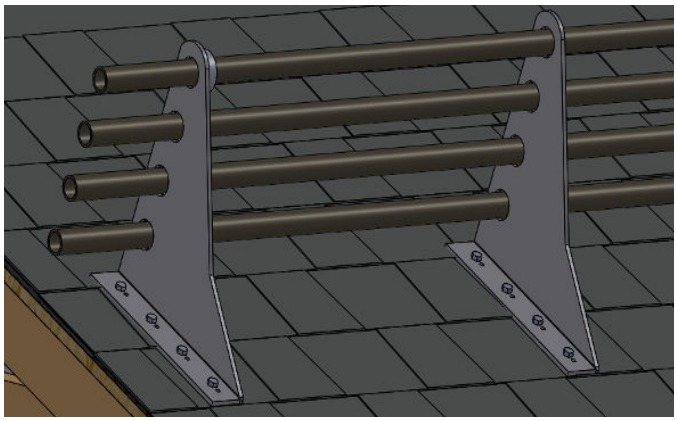

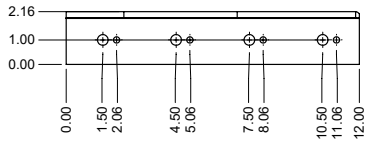

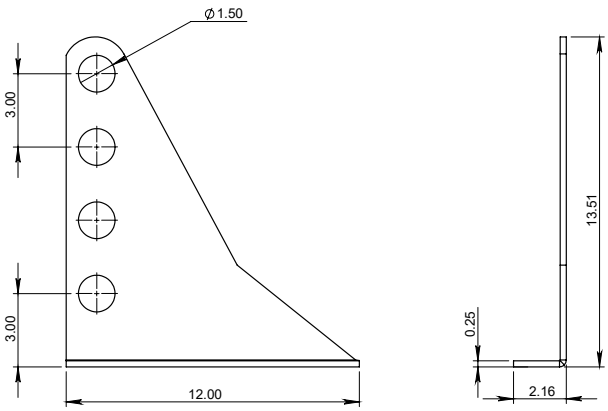

DIMENSIONS
DO NOT SCALE

INSTALLATION INSTRUCTIONS:

THE DECK MOUNT IS INSTALLED WITH A MINIMUM OF FOUR 3/8" LAG BOLTS OR FOUR 1/4" SDS SCREWS SCREWED INTO TRUSS, BLOCKING, OR OTHER STRUCTURAL FRAMING (2" MINIMUM DEPTH STRUCTURE PENETRATION). POSITION SNOW FENCE HOLES DIRECTLY OVER CENTER OF TRUSS. WE ADVISE PLACING SOME TYPE OF CAULKING OR SEALANT IN THE LOCATION OF THE HOLES BEFORE INSTALLING SCREWS. FLASHINGS CAN THEN BE FABRICATED AND PLACED AT THE INSTALLERS DISCRETION. AS AN OPTION, WE DO OFFER BUTYL FLASHING THAT IS APPLIED UNDER THE D1H DECK MOUNT.

* ALL ROOF PENETRATIONS THAT GO THROUGH THE UNDERLAYMENT ARE REQUIRED TO BE FLASHED OR SEALED.

SNOW RETENTION SYSTEMS

©TRA Snow and Sun, Inc., 2023